SUNRISE SOLARTECH CO., LTD

SR-M53680

Drawing

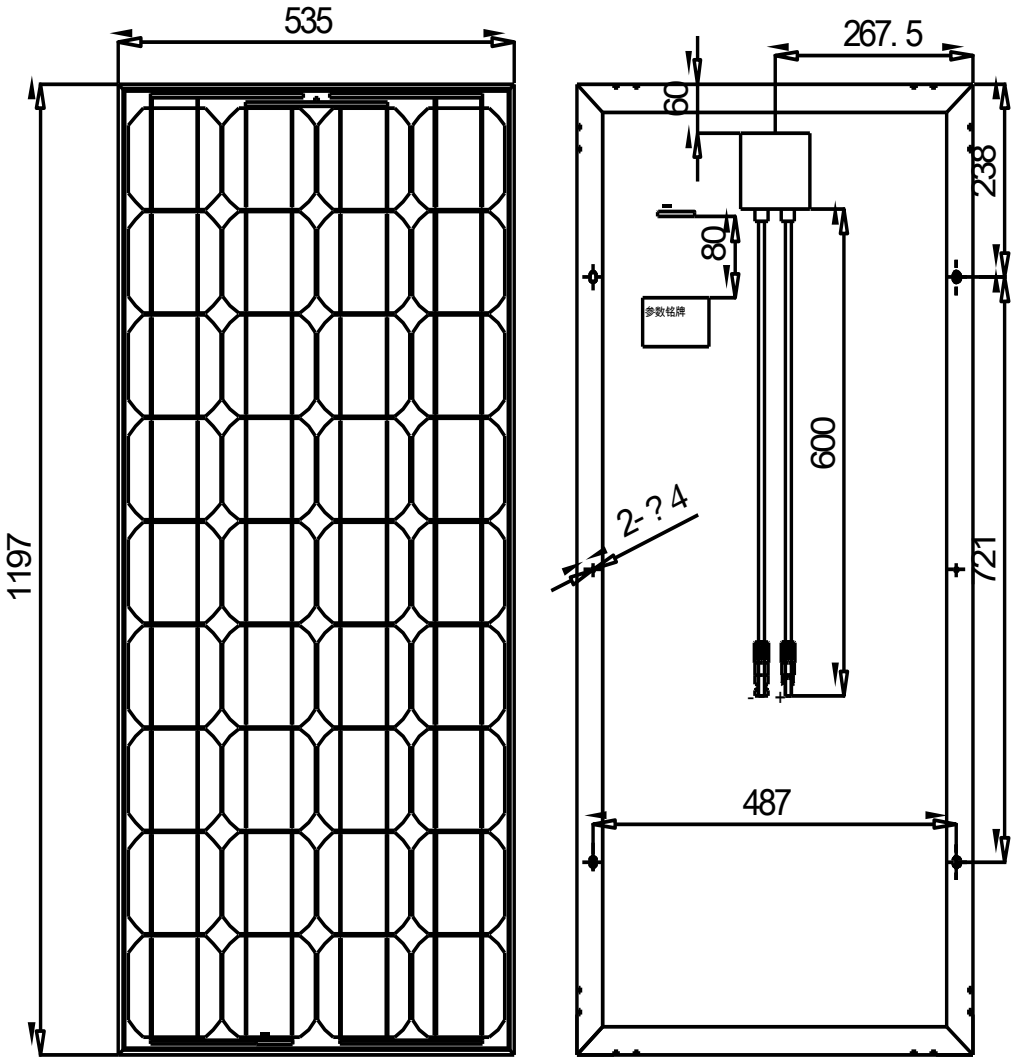

Data Sheet	
Peak Power	80 W
Number of Cell	36 Pcs
Short Circuit Current (Isc)	4.84 A
Open Circuit Voltage (Voc)	21.82 V
Maximum Power Current (Imp)	4.46 A
Maximum Power Voltage (Vmp)	17.93V
Dimension	1197 × 535 × 48 mm